TRACK SURFACE SYSTEM

10.01.212.XY

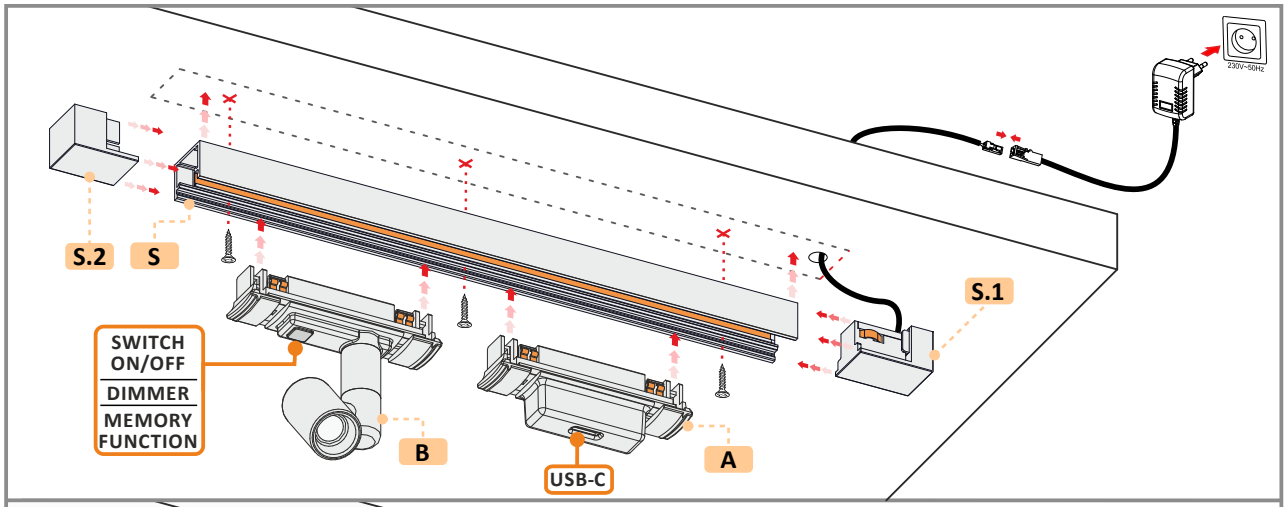

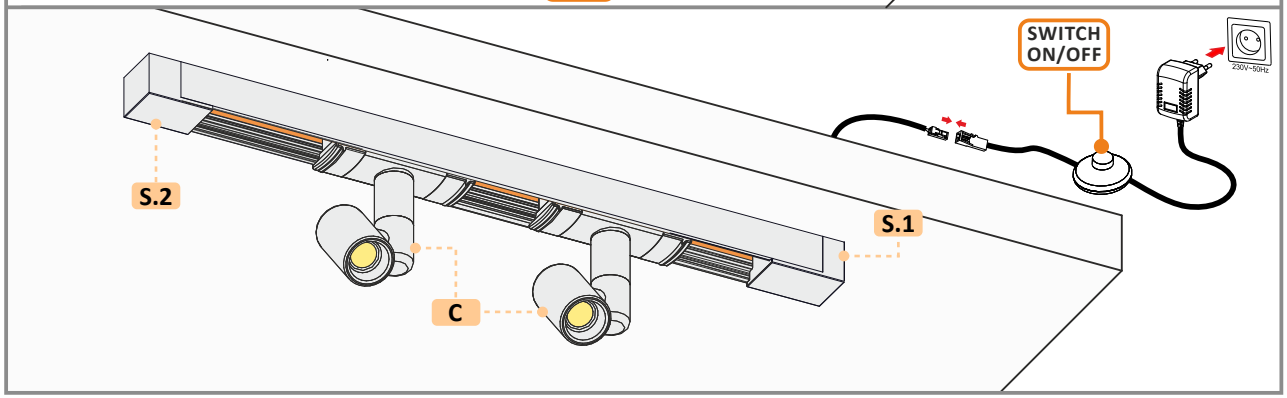

S

Track SURFACE
10.01.212.X/Lmm

S.1 POWER END CUP (Track SURFACE)
10.01.212.X/PEC

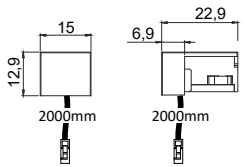

S.2 END CUP (Track SURFACE)
10.01.212.X/EC

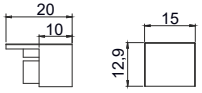

A TRACK USB-C SPOT
10.01.213.X/USB-C

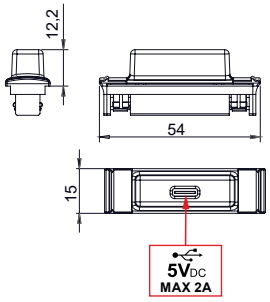

B TRACK MAYA SPOT V1 (switch)
10.01.213.XY/MAYA/V1

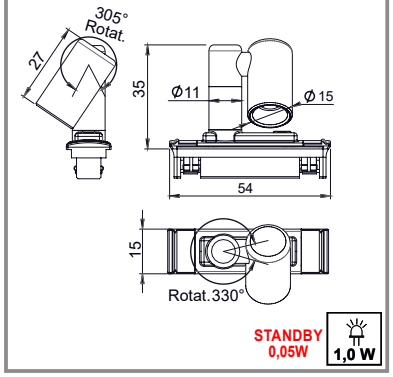

C TRACK MAYA SPOT V2
10.01.213.XY/MAYA/V2

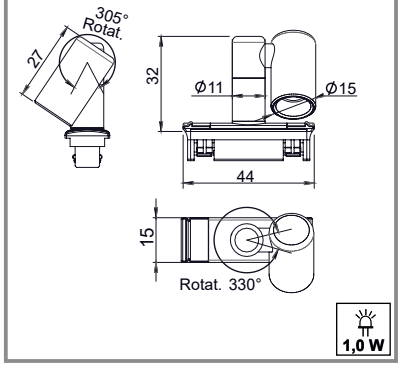

MAYA SPOT V2
1,0 W

MAYA SPOT V1 (switch)
1,0 W STANDBY 0,05W

5V DC MAX 2A STANDBY 0,005W

9-14V DC

III

FURNIKA Sp. z o.o.
Przemysłowa 11
48-200 Prudnik
Poland
+48 77 544 91 28
www.furnika.pl
info@furnika.pl